
NEW YORK
BRICK OVEN
Cupola Series

CUPOLA SERIES GW -G

Models 85 105 125 140

Commercial Revolving Wood Gas Stone Hearth Ovens New York Brick Oven Company 1800 OVEN 063

Configuration	Fuel Options	Application
Built-In / Custom Facade Ready	Wood, Gas, or Dual Fuel	Pizzeria, Restaurant, Display Kitchen

Overview

The Cupola is a premium built-in stone hearth oven platform designed for high-visibility kitchens, pizzerias, and chef-driven restaurant concepts. Each oven is built to order and can be configured for decorative finish packages, custom facade integration, and performance-driven cooking environments.

Final dimensions, utilities, venting, and finish details vary by model size and jobsite configuration.

Highlights

- Authentic stone hearth performance made in Italy
- Display-ready round chamber profile
- Custom tile, stucco, copper, or facade finish options
- Available for wood, gas, or dual-fuel operation
- Built for front-of-house or open-kitchen presentation

Category	Standard Offering	Project / Model-Specific Notes
Oven Type	Built-in round commercial hearth oven	Facade-ready and custom clad configurations available
Fuel Configuration	Wood, gas, or dual fuel	Spit Fire Automatic Burner System
Cooking Surface	High-mass refractory hearth	Deck diameter / usable bake area by final model selection
Exterior Finish	Choice of Painted Metal or Tile	Tile, stucco, metal, stone, copper, or field-applied facade options
Installation Style	Built-on-site Optional	Can be installed in open kitchens, display lines, or enclosed oven walls, and built on-site options
Exhaust / Venting	8" on 85,105,125 models 10" on 140 Enervex Gsv 12 Fan with speed control. Direct Vent ONLY UL 2221 GAS OVENS	Final vent diameter, hood integration, and draft requirements per installation call for free design
Utilities Electric	208 /240 volt single phase20 amp Nema 6-20 max load 13.amps 110 Volt 15-amp (dedicated line)	Plugs Provided 6' cords
Gas / or Propane	116,000 BTUS MAX 1/2 NPT Connection .5 Lbs pressure regulator and shut off valve use quick disconnect	Gas connection 1/2" NPT. Gas-suitable flex hose with quick disconnect required
Shipping / Set	Job dependent	Crated Ships LTL or Private Truck. The client is responsible for unloading. Fork Lift Needed 5,000 lbs rated Extended forks 6'

Model	Deck Dia. Overall Footprint	Weight
Cupola Series 85	34 in. W 63 X H 83 in. Venting 8"	2,645 LB.
Cupola Series 105	41 in. W 77 X H 83 in. Venting 8"	3,960 LB.
Cupola Series 125	49 in. W 79 X H 83 in. Venting 8"	4.400 LB.
Cupola Series 140	55 in. W 83X H 83 in. Venting 10'	4.600 LB.

Inquire for pizza oven fans and venting options additionally.

Standard Features

- Round chamber design with premium visual presence
- Refractory cooking floor and heat-retaining dome construction
- Commercial-grade oven body designed for demanding service
- Electronic Floor Heat
- Ash, clean out drawer
- Spitfire Burner system automatic
- Built-in integral vent, direct vent ready
- Adjustable Floor Speed Control
- View window for wood optional use
- Granit ledge

Important Notes

- All Cupola Series ovens are built to order and may be customized for fuel and project conditions.
- Final rough opening, service clearances, utility rough-ins, and venting must be confirmed from the approved submittal package.
- Weights, dimensions, and access requirements vary by model and finish package.
- Installation must comply with all applicable local codes, mechanical requirements, and jobsite conditions.

NSF/ANSI 4 -Issue:2009/04/22 Commercial Cooking, Rethermalization and Powered Hot Food Holding and Transport Equipment ANSI Z83.11 | CSA 1.8Minimum clearance: 2" (51mm) on all sides and rear from combustible surfaces, 0" (0mm) from non-combustible surfaces, 8" (203mm) below the front granite mantle for opening clearance, Allow a 36" opening for service on the bottom front (required). The oven should be placed on a noncombustible surface and rated for oven load. This appliance must be electrically grounded in accordance with local codes or, in the absence of local codes, the National Electrical Code (ANSI/NFPA 70)

85 INFERNO SERIES WG-G

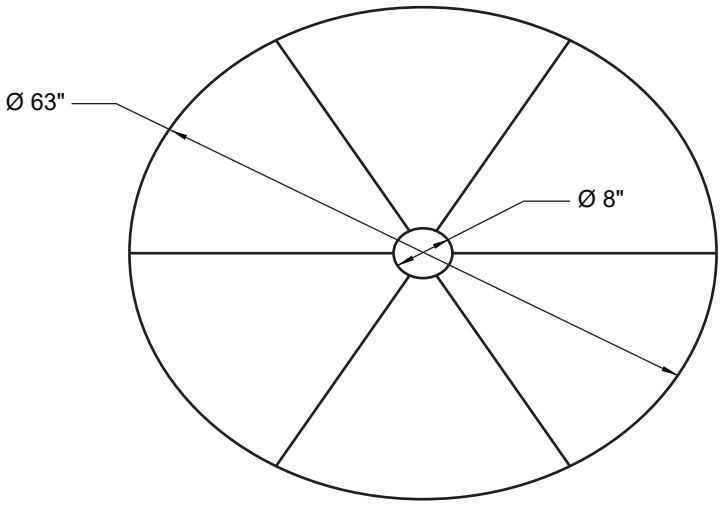

Top View



Isometric View

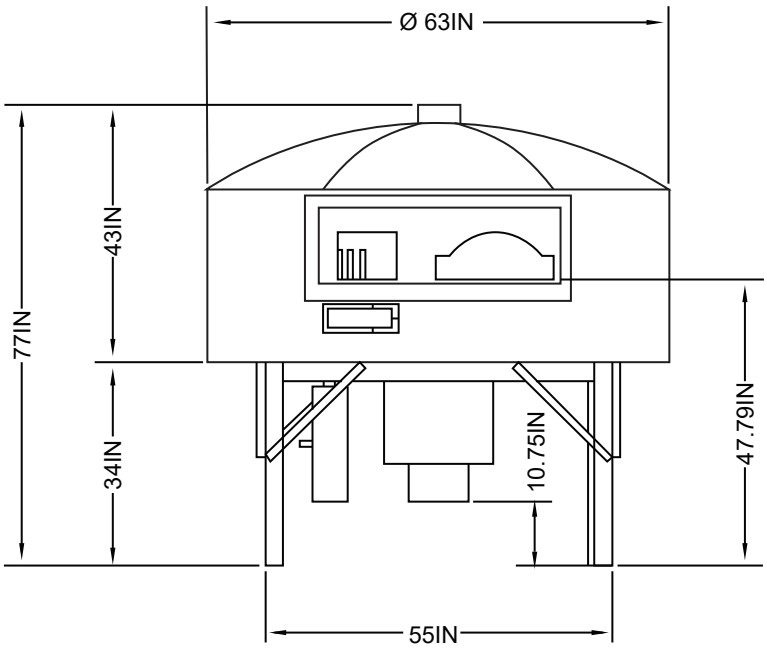

Front View

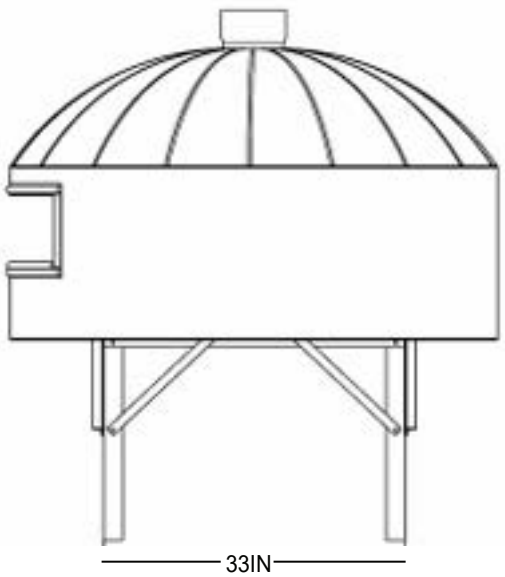

Side View

105 CUPOLA SERIES WG-G

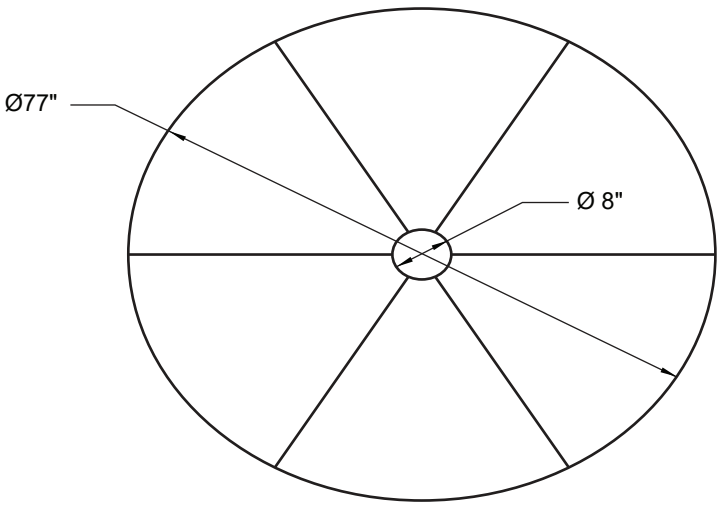

Top View



Isometric View

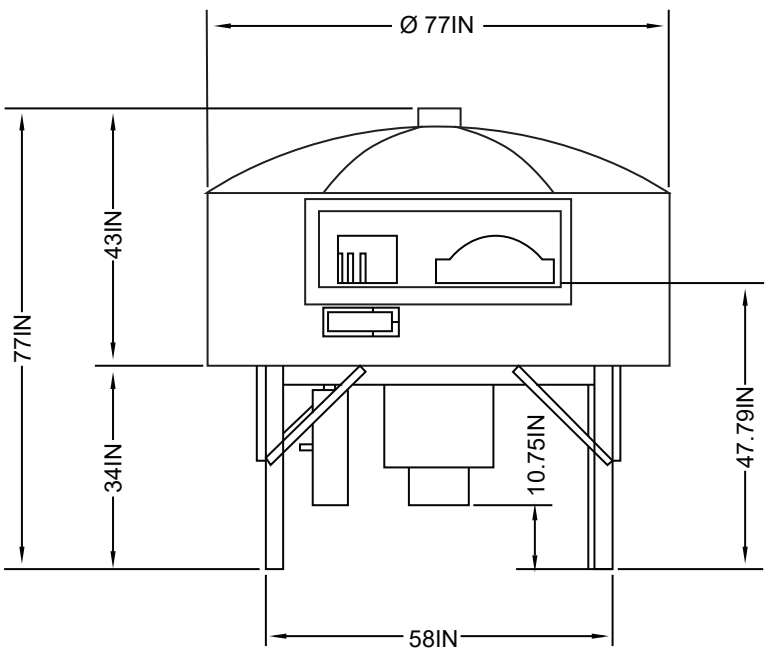

Front View

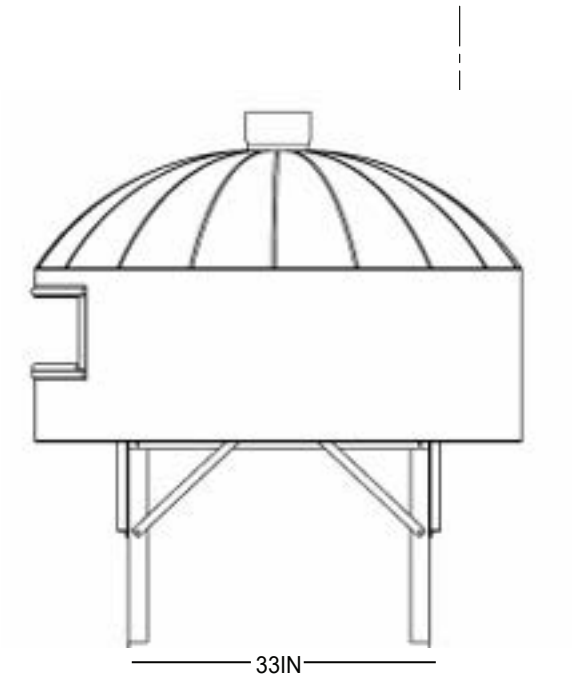

Side View

125 CUPOLA SERIES WG-G

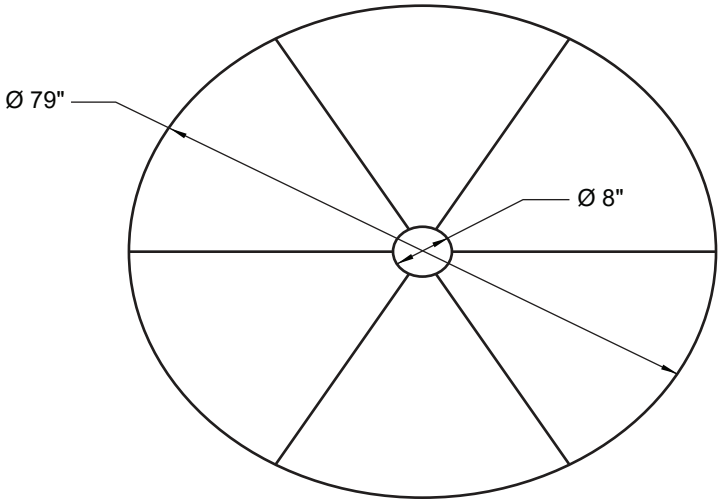

Top View



Isometric View

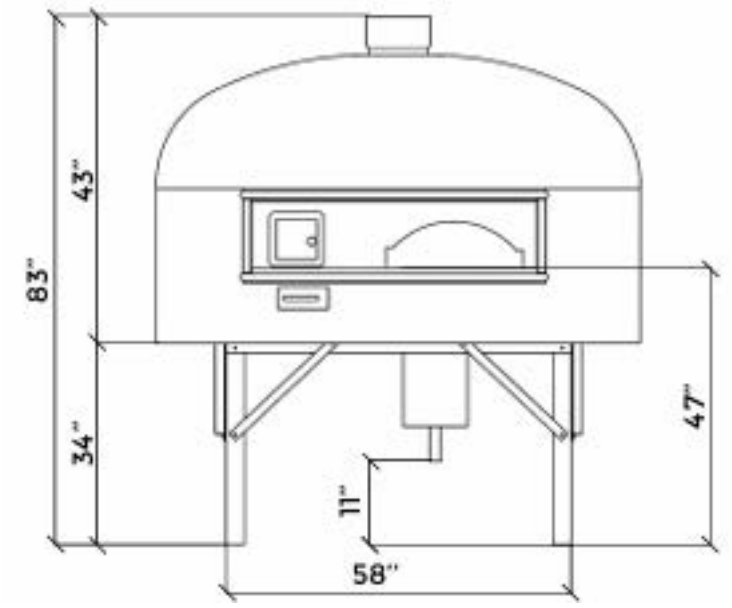

Front View

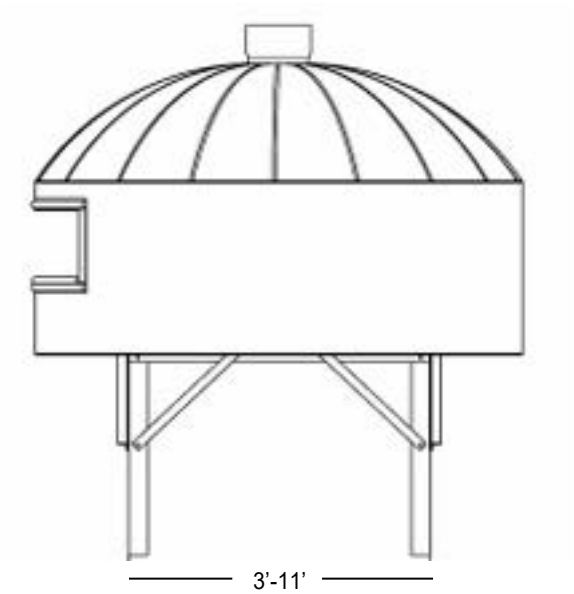

Side View

140 CUPOLA SERIES WG-G

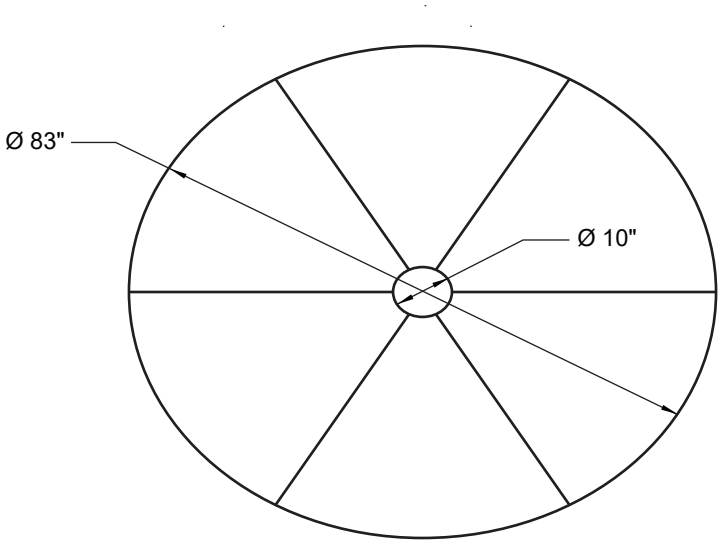

Top View



Isometric View

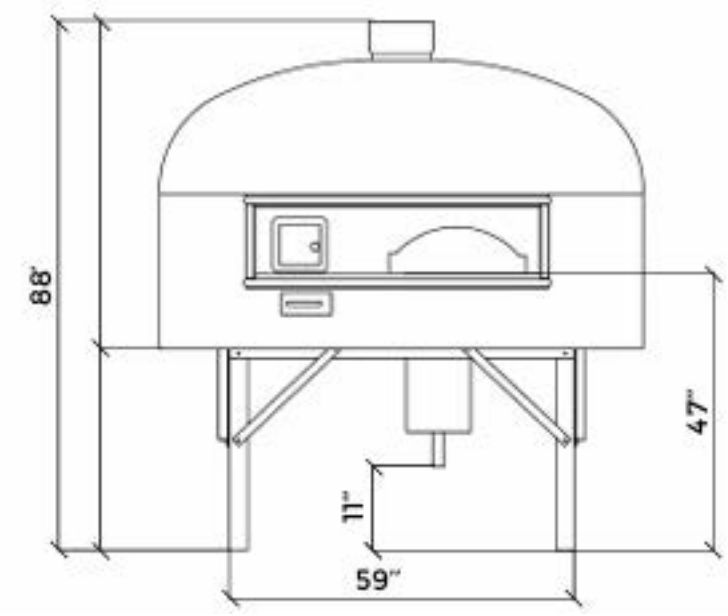

Front View

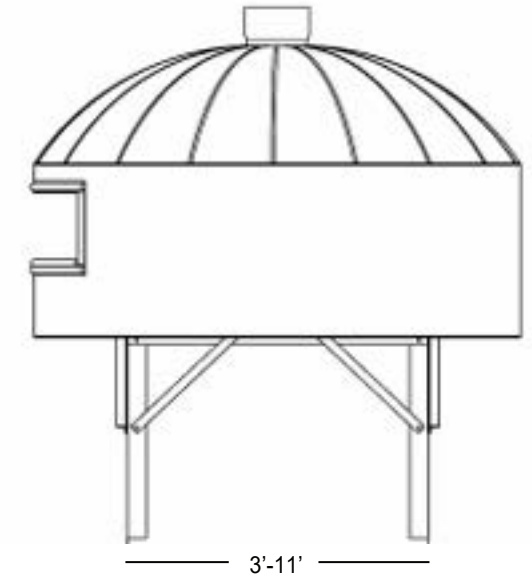

Side View